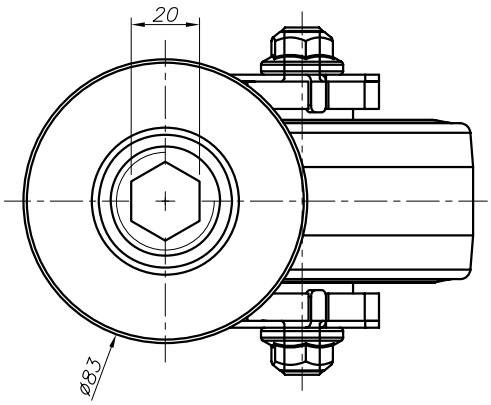

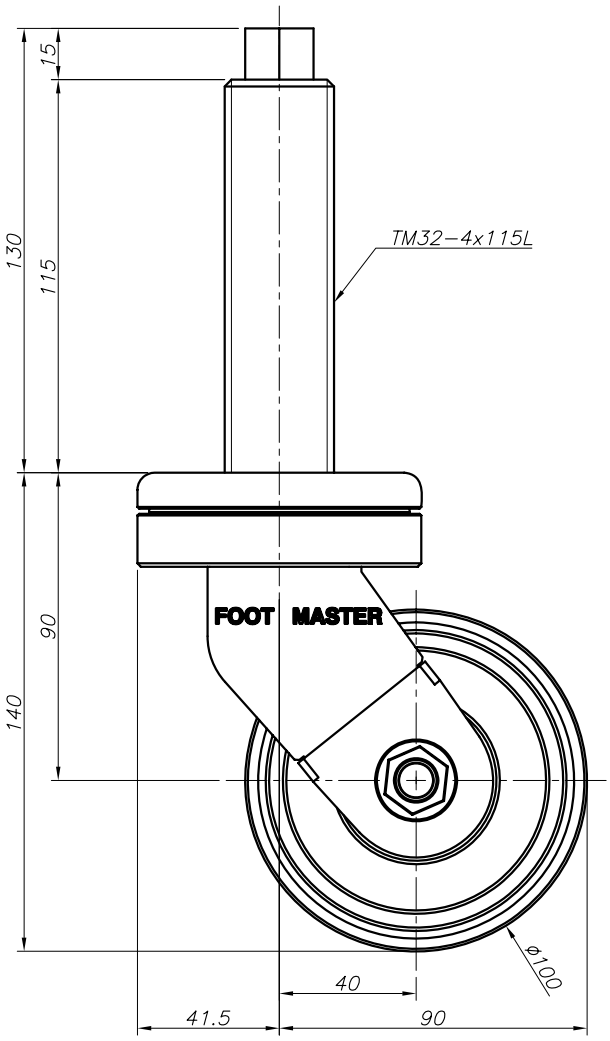

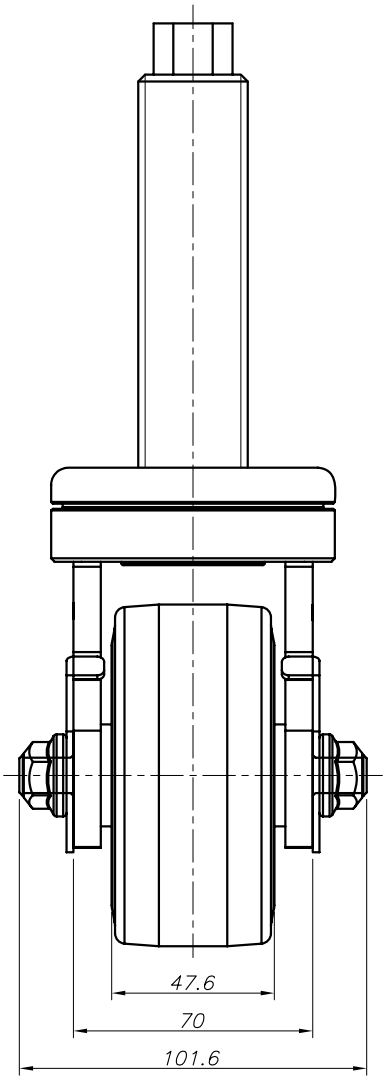

FOOT MASTER ®	FOOMA®	G-DOK IND.	MODEL NAME	GXT-100-ASS(TM32)

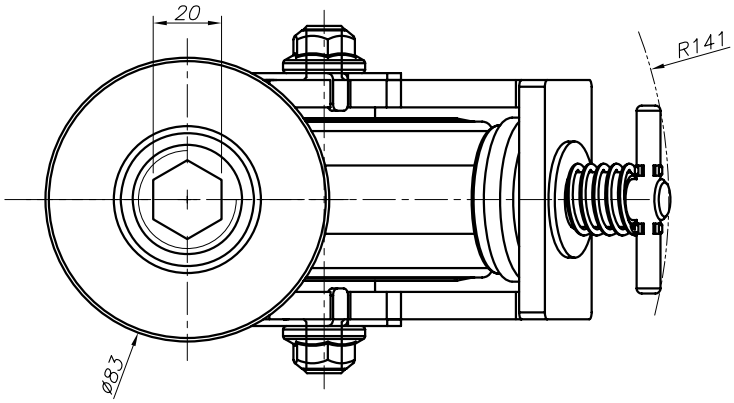

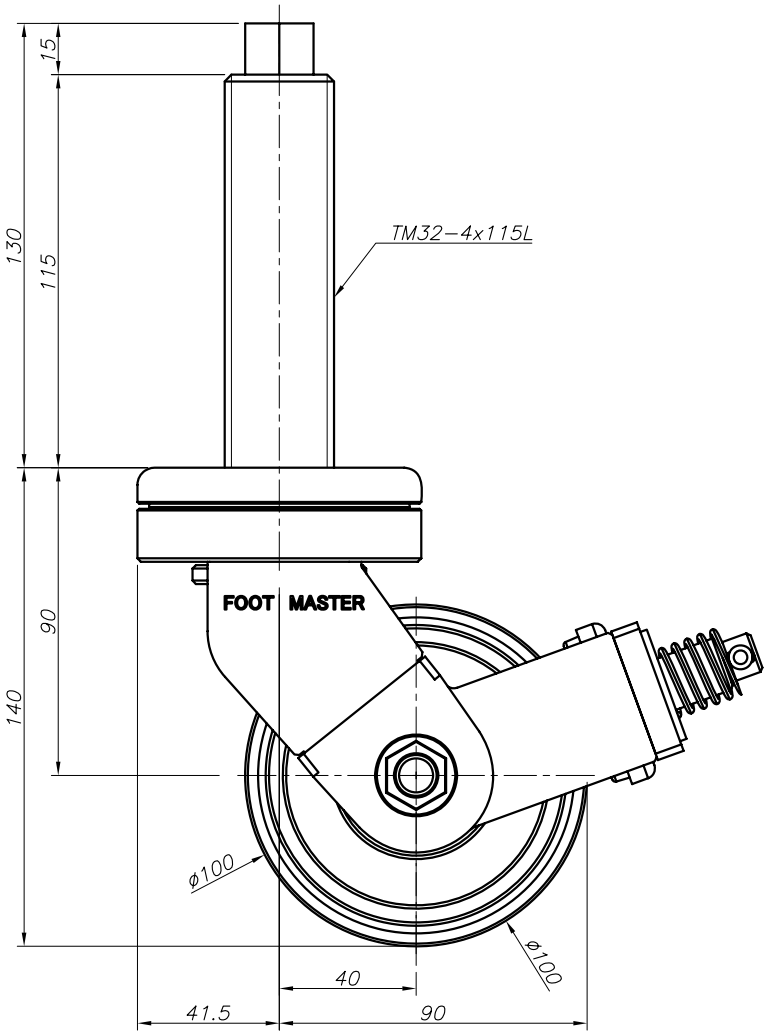

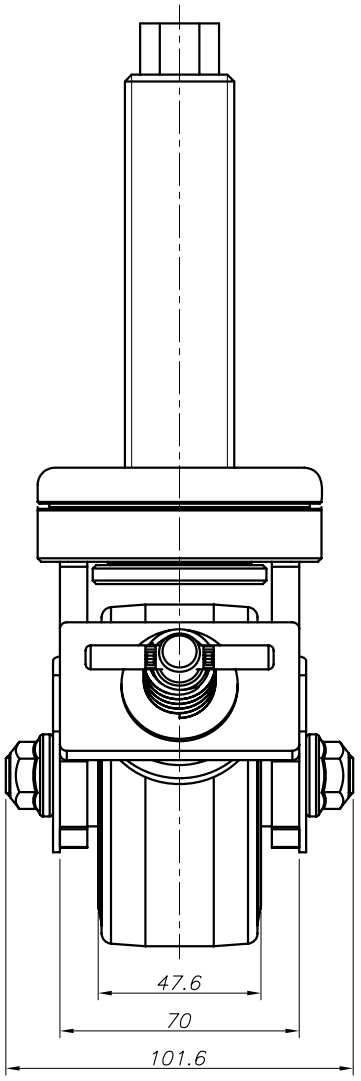

FOOT MASTER ®	FOOMA®	G-DOK IND.	MODEL NAME	GXT-100-BSS(TM32)

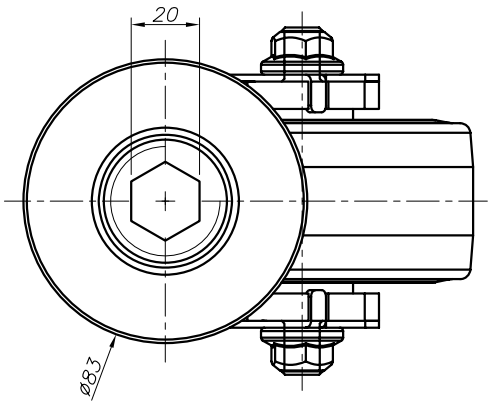

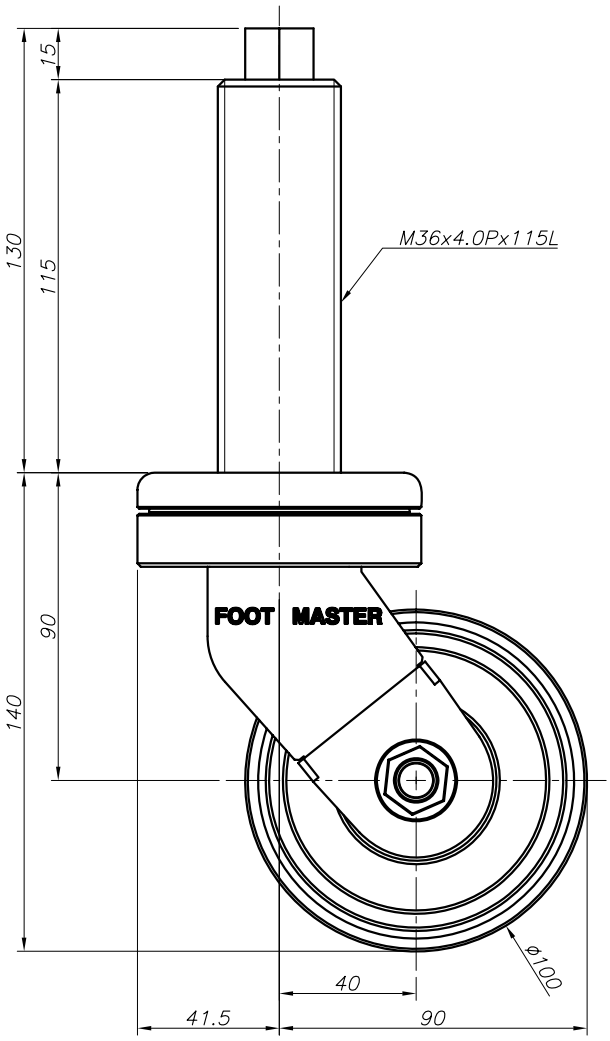

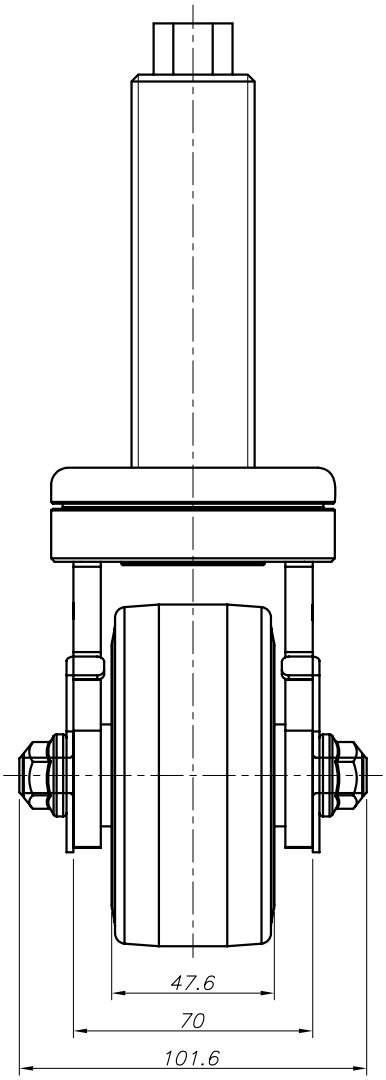

FOOT MASTER ®	FOOMA®	G-DOK IND.	MODEL NAME	GXT-100-ASS(M36)

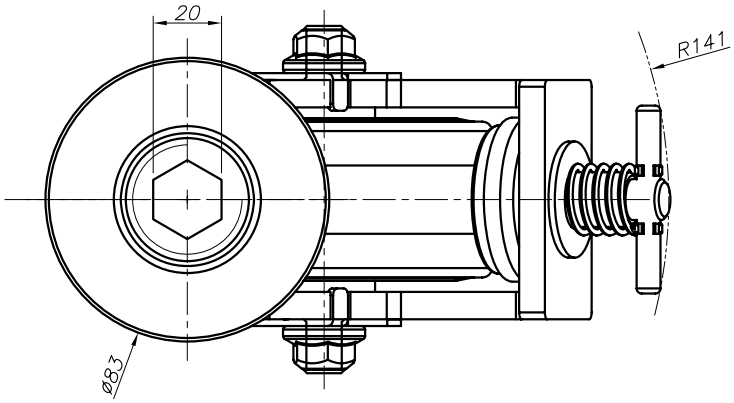

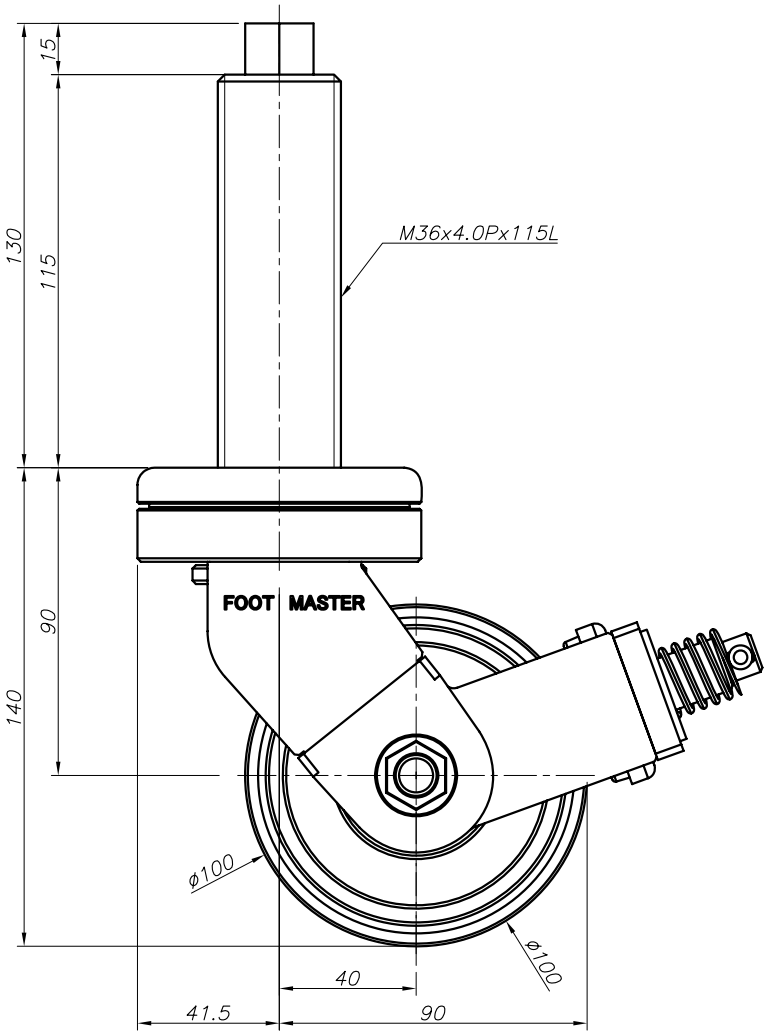

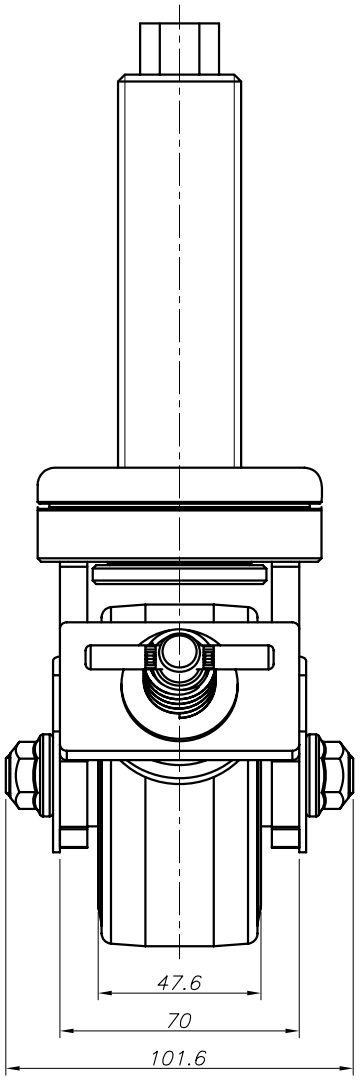

FOOT MASTER ®	FOOMA®	G-DOK IND.	MODEL NAME	GXT-100-BSS(TM36)